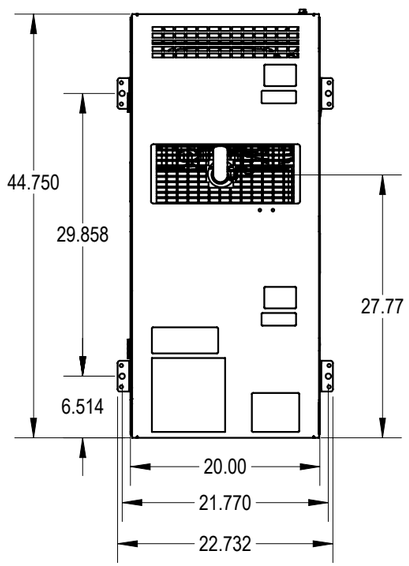

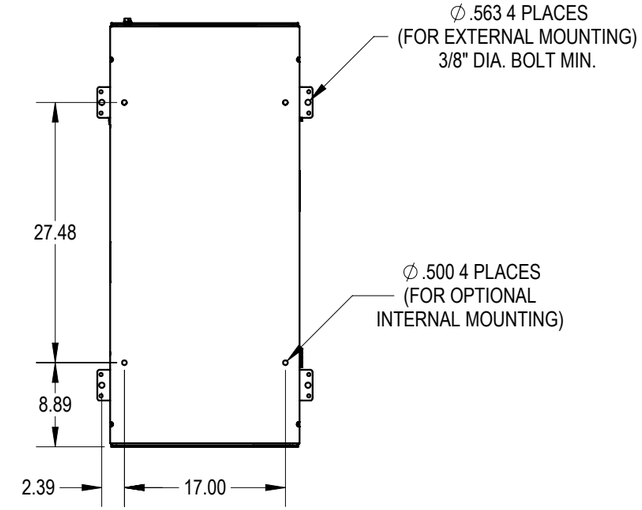

REFER TO OWNERS
MANUAL FOR BOLTING
UNIT IN PLACE

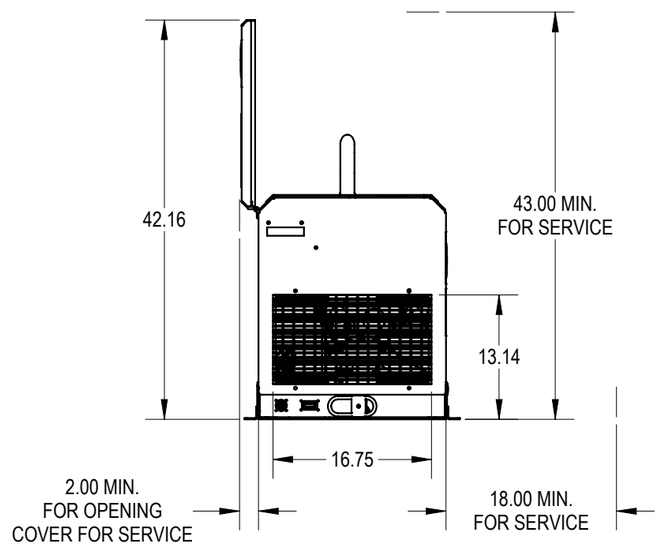

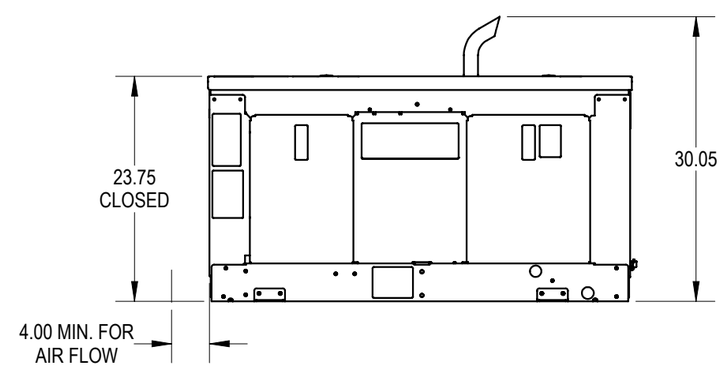

RoHS COMPLIANT

Rev	Date	By	ECO	Revision Description

Dimensions are in INCHES
Unless Otherwise Specified

Decimal:
0.X ±:
0.XX ±:
0.XXX ±:
Fractional ±:
Angular ±:
Machine Finish:

Miller®
MILLER ELECTRIC MFG. LLC, APPLETON, WI. USA An ITW Welding Company

Title: ILLUS,MACHINE LAYOUT 907772

NOT TO SCALE | CONFIDENTIAL | SHEET: 1 of 1

© MILLER ELECTRIC MFG. LLC ("MILLER"). THIS DOCUMENT/FILE AND THE INFORMATION CONTAINED THEREIN ("MATERIAL") IS MILLER PROPRIETARY AND CONFIDENTIAL INFORMATION AND SHALL NOT BE DUPLICATED OR DISTRIBUTED WITHOUT MILLER'S EXPRESS WRITTEN CONSENT. THIS MATERIAL SHALL BE USED SOLELY FOR THE PURPOSE SET FORTH BY MILLER AND SHALL BE RETURNED TO MILLER UPON REQUEST.

Orig. Drn. By: JAJ
Date: 03/04/19
Rev. Appvd. By: JAJ
Date: 03/14/19

Size: B
Drawing No: 285053
Rev: A