This print is and will remain the property of Miller Electric Mfg Co, Appleton, WI. Furnished with the understanding it is not to be duplicated in any manner without approval of Miller Electric Mfg Co. This print is furnished to assist order requirements and will be returned to Miller Electric Mfg Co upon request.

MATERIAL:
FINISH:

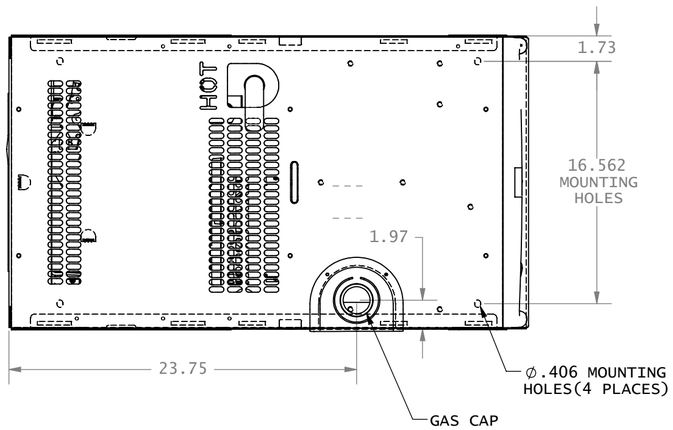

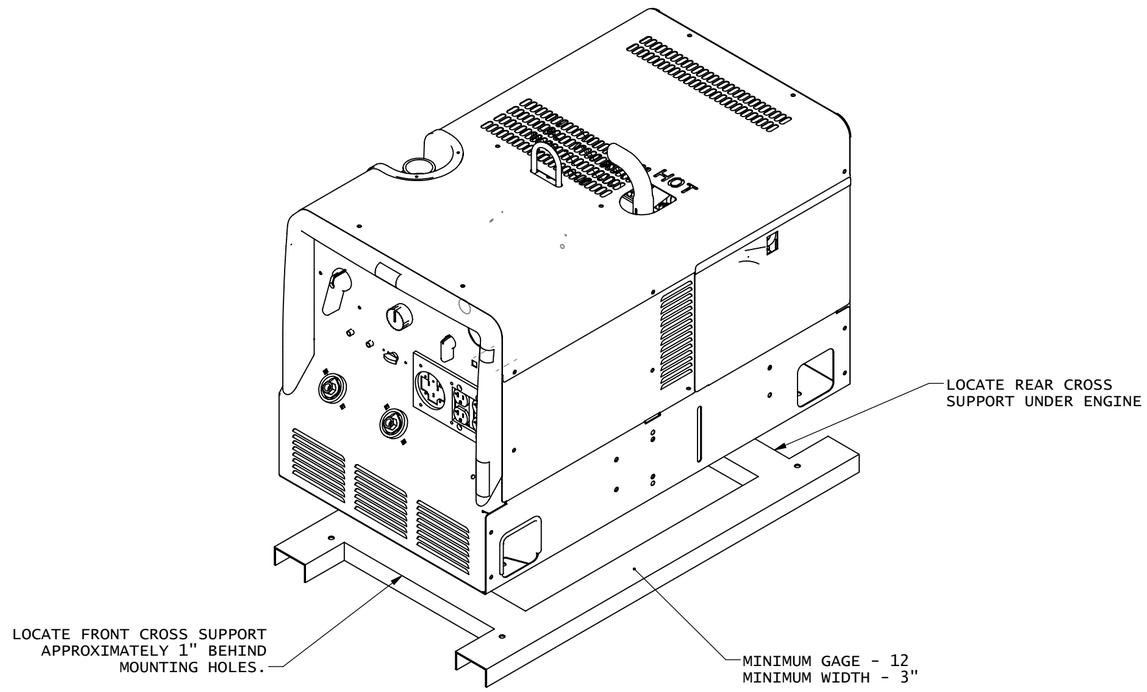

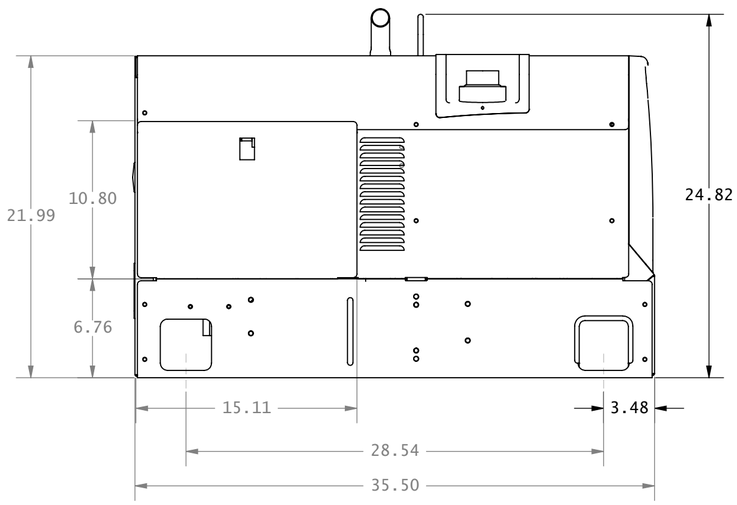

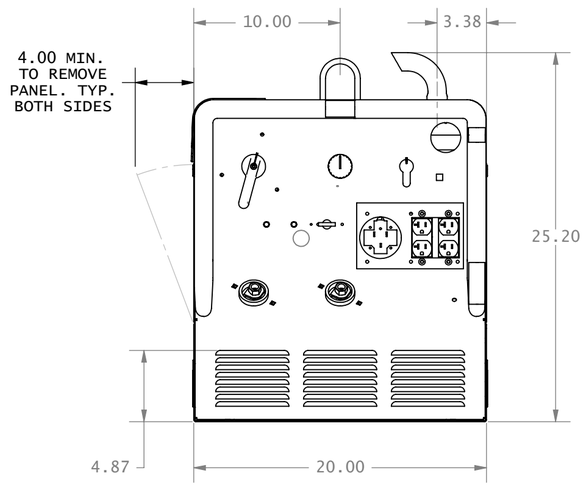

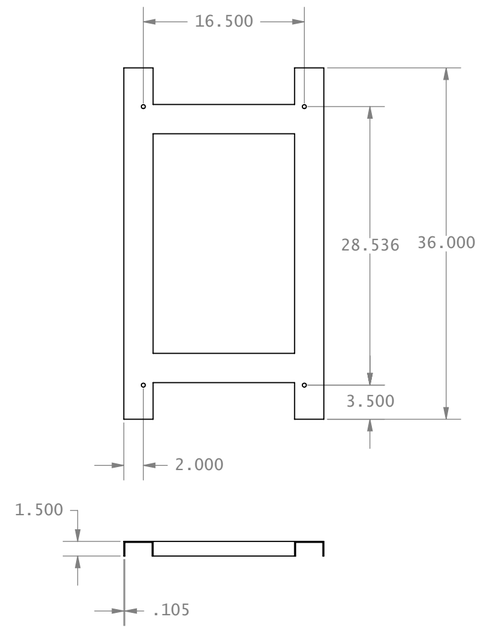

Rev	Date	By	ECO	Revision Description

Tolerances Unless Otherwise Specified
Decimal ±:
Fractional ±:
Angular ±:
Finish:

Miller

MILLER ELECTRIC MFG. CO.,
APPLETON, WI. USA

Title: **WILDCAT 200**

DRAWING NOT TO SCALE

CONFIDENTIAL

Drawn By:
Date:
Size **C**
Drawing No
Rev